IMPORTANT: READ THIS MANUAL THOROUGHLY BEFORE INSTALLING AND OPERATING UNIT. **DO NOT RUN UNIT WITHOUT PARTICULATE FILTER ELEMENT INSTALLED!!!!!**

Phoenix C4- Membrane Based Portable Lube and Hydraulic Oil Purifier Cart With Aquatrex Operations Manual

Rev 8– 12222015KB-DNLSN

INDEX

PAGE 1	SECTION 1:	PHOENIX SPECIFICATIONS
PAGE 2 – 4	SECTION 2:	DESCRIPTION AND OPERATION
PAGE 5 – 6	SECTION 3:	COMPONENT LIST AND DESCRIPTION
PAGE 7	SECTION 4:	RECOMMENDED INSTALLATION PROCEDURE
PAGE 8-12	SECTION 5:	CRANE RIGGING AND UNIT START UP PROCEDURE
PAGE 13 – 16	SECTION 6:	AQUATREX PLC TOUCHSCREEN OPERATION
PAGE 17	SECTION 7:	PREVENTATIVE MAINENANCE
		RECOMMENDED SPARE PARTS
PAGE 18 – 20	SECTION 8:	TROUBLE SHOOTING
		FLUSHING PROCEDURE

SECTION 1

PHOENIX SPECIFICATIONS

FLOW RATE:	4 GPM
MAX OPERATING VISCOSITY	3 cSt to 1000 cSt
FLUID/OIL COMPATIBILITY	MINERAL BASED, PAO AND POLYOLESTER (Phosphate Ester Membrane Optional)
MAX RECOMMENDED OPERATING PRESSURE	20 PSIG
MIN/MAX OPERATING AMBIENT TEMP	0 – 50 C
MIN/MAX STORAGE TEMP	- 20 – 60 C
MIN/MAX OPERATING FLUID TEMP	- 15C – 80 C
EMPTY WEIGHT	250 LBS
INLET/OUTLET CONNECTIONS	1” Male JIC
DIMENSIONS	20”W X 22”D X 51”H
VOLTAGE	110 V
MAX AMPERAGE DRAW	12.5 AMPS

SECTION 2:

PHoenix Portable Lube and Hydraulics Oil Purifier

(Description and Operation)

The Phoenix oil purifier's is a compact and portable oil purifier cart with the capability to remove free, emulsified and dissolved water from lube and hydraulic systems of between 5 and 2000 gallons. It is supplied with its own 4 GPM fluid pump. This purifier can be purchased without a fluid pump as a smaller 1 gpm hand carried unit under the part number PHX-M.

The Phoenix utilizes a cutting edge hollow fiber membrane bundle to remove water from oil. Moisture is pulled out of the oil by a vacuum as wet oil passes across the outside of the membrane. A vacuum created by a supplied vacuum pump pulls moisture through the membrane where it is expelled as vapor from the vacuum pumps exhaust port. Water levels as low as 25 ppm are achievable depending on oil sump size and water ingression levels. This cutting edge water removal membrane has no limit to the quantity of water it can remove and requires minimal maintenance and operator attention. It should provide years of worry and trouble free operation before replacement.

IMPORTANT NOTE:

The membrane bundle is not serviceable in the field and should be returned for replacement when its useful life is complete. Never try to disassemble the membrane housing in the field or damage to the bundle may occur.

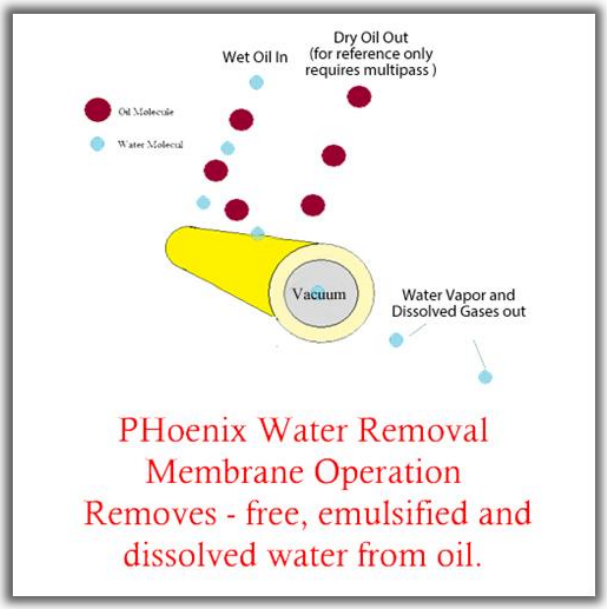

Disclaimer: Photo is illustrative. The membrane is not claimed as defect free and there may be very slight oil carryover to the vacuum side. This does not however effect the performance or many benefits of the Phoenix Purifier. Water Removal is multi-pass and requires several passes of oil across membrane to be fully effective.

Figure 1

(SECTION 2: Description and Operation - Continued)

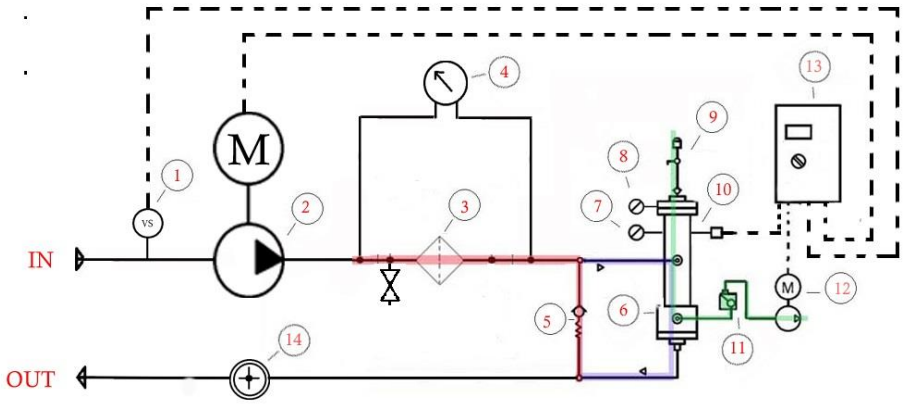

PHOENIX WITH AQUATREX SIMPLE FLOW SCHEMATIC

Figure 2

Oil is pumped into the Phoenix Cart by (item 2) a 4 gpm gear pump with a built in 65 psid relief valve. Oil then flows into 7 micron non bypass Spin On Filter element. There is a visual filter plugged indicator on the filter housing (item 4) which indicates when the filter needs to be replaced. (Item 1) (Aquatrex Supplied Models Only) is a vacuum switch which will shut down the Phoenix when inlet pump vacuum rises above 15” of vacuum. This is to prevent cavitation of the fluid pump in the event the Phoenix inlet becomes plugged or because of temporary increases in oil viscosity due to ambient cooling. If this happens a high vacuum alarm will register on the Aquatrex PLC Display and the Phoenix will shut down. The Phoenix C4 with Aquatrex option is supplied with a plc (Item 13) which is programmed to automatically try to restart the fluid pump every 30 minutes until the incoming vacuum level reaches 15” of mercury or lower.

Oil then passes into (item 6) the water removal membrane filter housing. A 10 psid spring loaded check valve (Item 5) is piped in parallel with the water removal membrane housing to provide pressure relief across the membrane bundle in the event of excess differential pressure. The membrane housing may handle up to 150 psig of total pressure however (Item 5) the relief limits the total pressure drop possible across the membrane bundle to about 10 psid.

This total pressure may be read from the (item 7) 0-100 psig liquid filled pressure panel gauge installed on the back of the Phoenix C4. After oil enters the housing it is forced across the water removal membrane and then exits the housing. Water is removed from the oil as it passes across the membrane. If the spring loaded bypass (item 5) is open, then the flow from the membrane housing will recombine with the partial non dewatered oil relief flow passing through the check valve. Both combined flows exit the purifier and return to the oil reservoir through (item 14) - a sight glass with a spinning oil flow indicator.

A vacuum is generated by the (item 12) Vacuum pump which pulls sweep air through (item's 9) the (vent filter, vacuum control valve and leak prevention check valve) and then through the center of the membrane hollow fiber. (Item 11) An air eliminator is installed between the membrane housing and vacuum pump in order to prevent any oil leakage to the vacuum side in the event that the membrane is compromised. The air eliminator (Item 11) and the check valve installed in (Item's 9) allow the Phoenix to automatically seal itself completely off in the unlikely event of a membrane break or rupture. See figures 3 and 5 below showing sweep air flow for further information. The total vacuum generated by (Item 12) vacuum pump is controlled by manually throttling down on the control valve located on (item's 9) and may be read in inches of mercury on the panel mounted vacuum gauge (item 8). Vacuum is typically set between 25" and 27" of mercury. There is a sight glass and drip leg located on the membrane housing (item 8) in order to drain any potential but unlikely liquid condensation from the line.

(Aquatrex Only) A water sensor (item 10) which reads the relative humidity of the incoming oil up to 100% saturation is installed on the Phoenix. The water sensor in addition to the PLC (Aquatrex Only) located on the front of the unit (item 13) allows operators to view the relative humidity of their oil in % saturation in real time. This combined option also allows operators to set low and high water set points which can control the vacuum pump run time based on necessity. In addition - a resettable vacuum pump run time meter and a cycle count meter in the PLC program allows operators to track water ingression rates into their equipment. This option makes the Phoenix with Aquatrex not only an oil purifier but also a piece of diagnostic equipment to monitor water ingression rates into oil reservoirs.

Figure 3

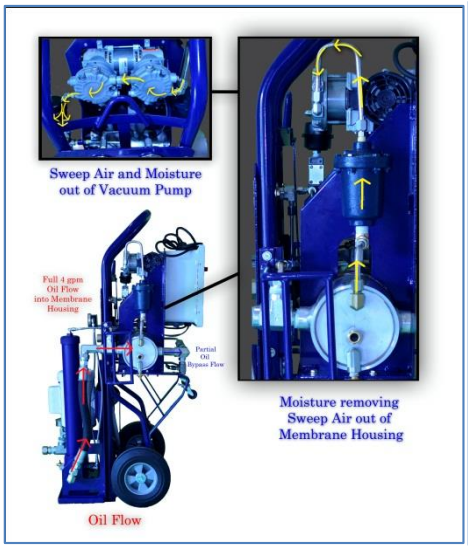

Figure 4

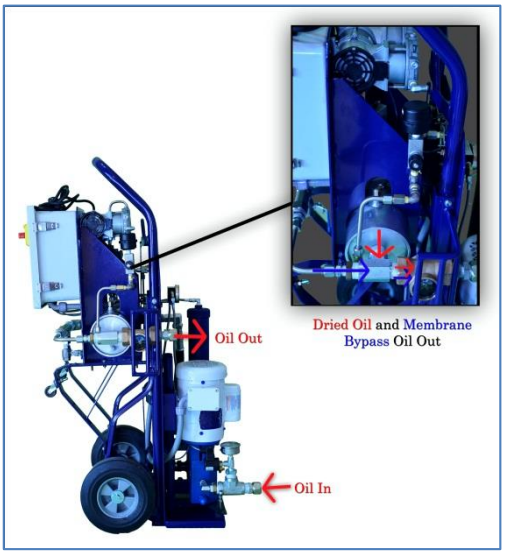

Figure 5

SECTION 3: Phoenix with Aquatrex COMPONENT LIST AND DESCRIPTION

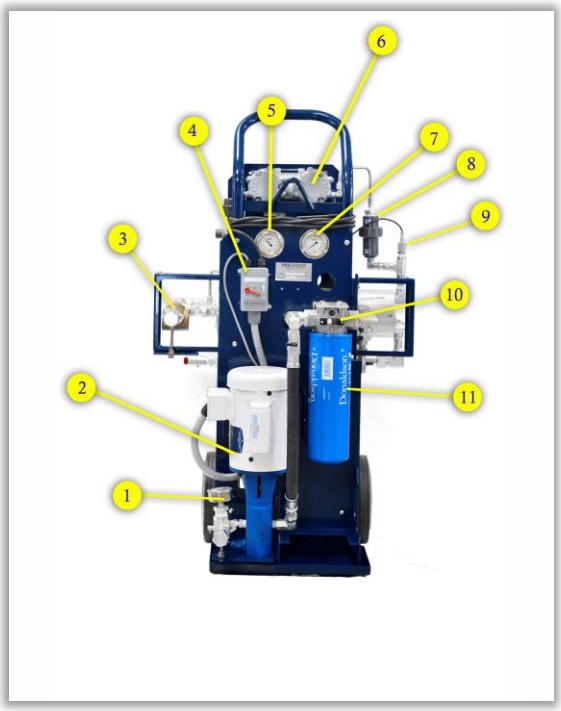

Figure 6

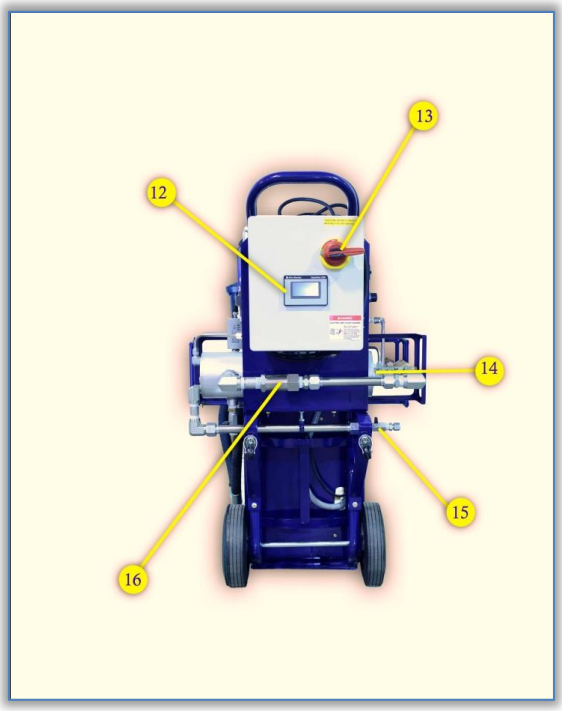

Figure 7

Figure 8

(SECTION: 3 Component List and Description – Continued)

See Figures 6-8 on page 5

Item	Description
1	Inlet Vacuum Switch (Aquatrex Only) & Gauge
2	4 gpm Viking gear pump & Baldor Wash-down Duty Motor
3	Outlet Oil Flow Indicator Sight Glass
4	On Off Switch (Non Aquatrex Supplied Units Only)
5	0-30” HG Compound Vacuum/Pressure Gauge
6	Gast Model SAA-V108-NQ Dual Stage Vacuum Pump
7	0-100 psig Oil Pressure Gauge
8	Membrane Oil Leak Preventer
9	Water Sensor
10	Filter Plugged Indicator
11	Particulate Filter
12	Aquatrex Only Control Panel and Touch Screen Display
13	Aquatrex PLC Only On/Off Switch
14	Phoenix Water Removal Membrane Housing
15	Condensate Drip Leg Drain Valve
16	10 psid Automatic Membrane Bypass Valve
17	Oil Sample Valve
18	Vacuum Side Condensate Sight Glass
19	Membrane Housing Oil Drain Valve

Section 4:

(RECOMMENDED INSTALLATION)

IMPORTANT

DO NOT CONNECT THE PHOENIX PURIFIER OUTLET LINE TO ANY POINT OR PRESSURE LINE WHERE THE BACK PRESSURE COULD EXCEED 20 PSIG OR DAMAGE TO THE MEMBRANE BUNDLE COULD OCCUR AND REPLACEMENT MAY BE NECESSARY. IT IS IDEAL TO CONNECT THE RETURN LINE OF THE PHOENIX TO A POINT OF LOWEST PRESSURE AS POSSIBLE.

There are several ways to connect the PHOENIX to a reservoir with some being better than others. Figures 10 shows two ideal ways since they both allow suction from the bottom of the reservoir where water and particulate can collect and return to the top away from the suction. This provides the maximum turnover of oil while the siphon breaks provide a level of safety in the event of a hose or fitting break/leak preventing the possibility of accidentally completely draining the reservoir. The return pipe should be unobstructed and end below the oil line to prevent aeration of the oil upon return to the reservoir.

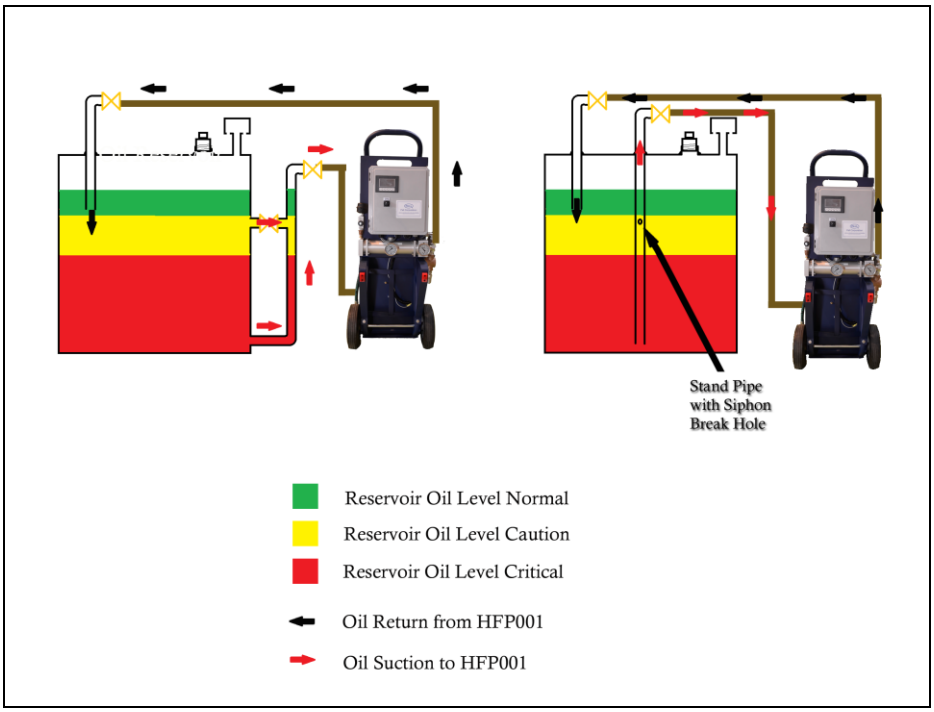

Figure 10

Section 5:

CRANE RIGGING AND Unit Startup

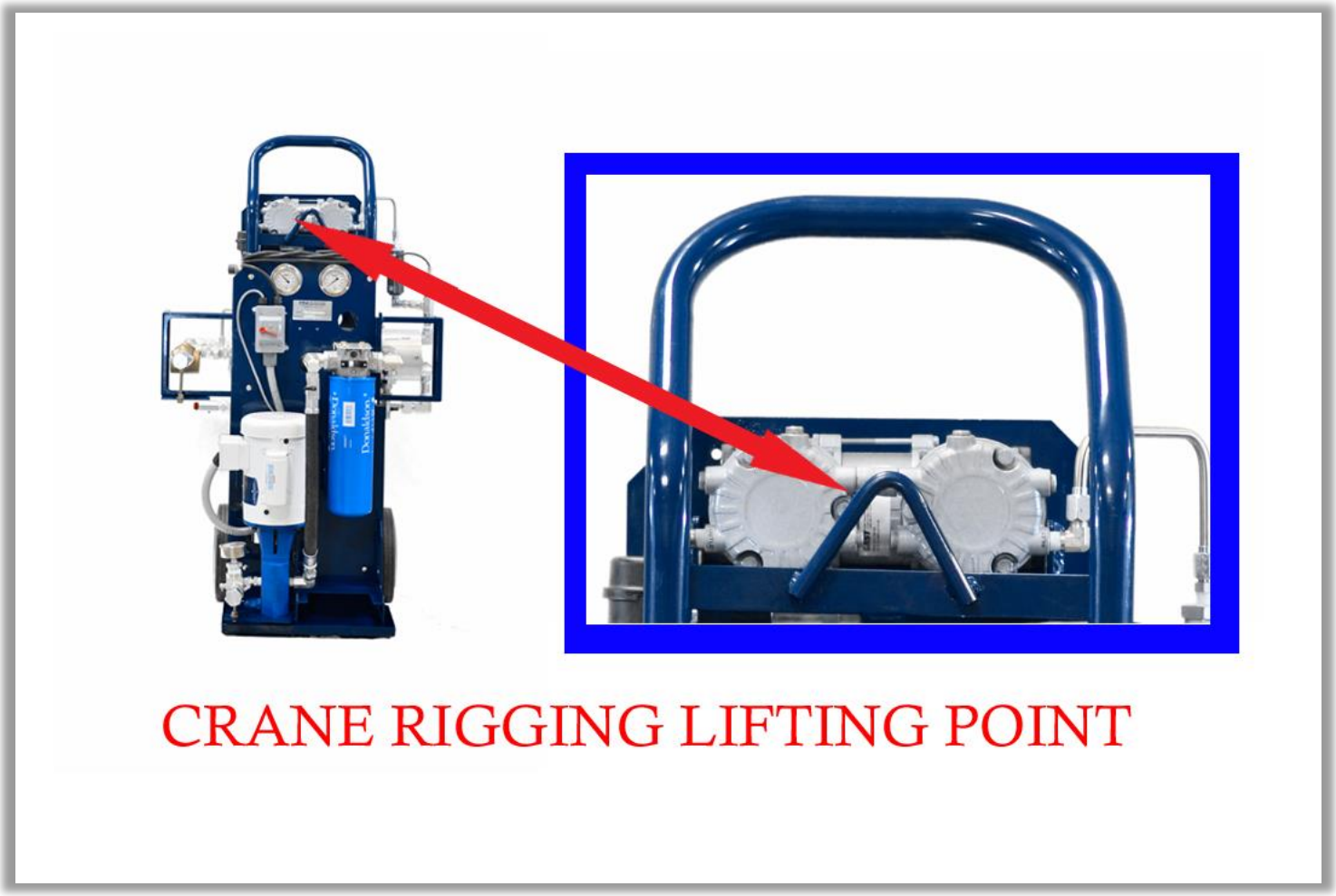

Figure 11

(SECTION 5: Unit Startup - Continued)

1. INSTALL PHOENIX ON TO A SECURE LEVEL LOCATION AND CONNECT 1” INLET AND OUTLET HOSES TO OIL RESERVOIR PER SECTION 4. PLUG UNIT INTO A 110 VOLTS SERVICE WITH AT LEAST A 15 AMP RATING.

   IMPORTANT NOTE: IF UNIT IS TO BE LOCATED OUTDOORS IN THE ELEMENTS PHOENIX- SHOULD BE TARPED AND TARP STRAPPED DOWN TO LIMIT EXPOSURE TO CONTROL BOX AND VACUUM PUMP. RECOMMEND MCMASTER CARR PN 8033T14 BOX TARP

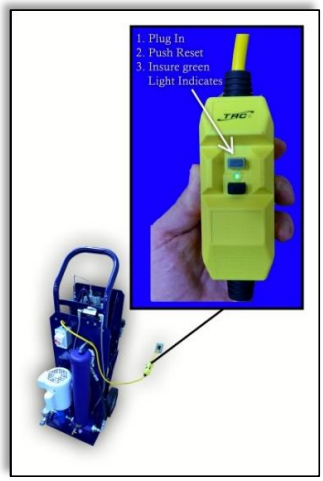

2. NON AQUATREX UNITS - PUSH RESET BUTTON ON SUPPLIED GFI AND INSURE GREEN LIGHT INDICATES. IF LIGHT DOES NOT INDICATE CHECK VOLTAGE AT SOURCE TO INSURE THERE IS 110 V POWER PRESENT. GFI NEEDS TO BE RE-SET EACH TIME PHOENIX IS PLUGGED INTO A NEW POWER SOURCE OR UNIT WILL NOT START.

   .

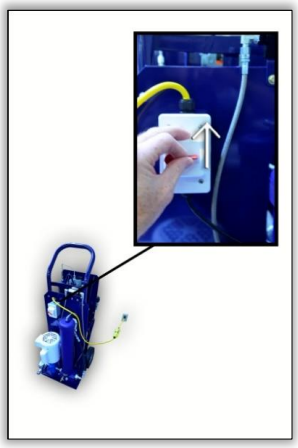

3. NON AQUATREX UNITS INITIATE POWER TO PHOENIX BY TURNING NEMA 4 SWITCH ON BACK TO THE UP/ON POSITION.

(SECTION 5: Unit Startup - Continued)

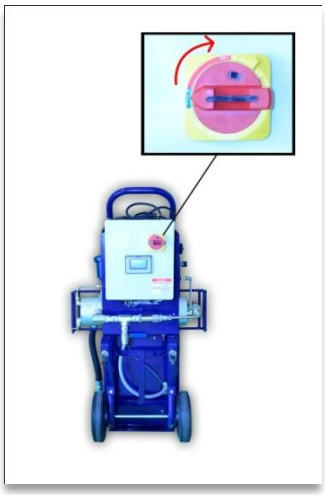

4. AQUATREX SUPPLIED UNITS ONLY - INITIATE POWER TO PHOENIX BY TURNING POWER KNOB CLOCKWISE. WAIT 20 SECONDS FOR PLC TO POWER ON AND MOVE TO STEP 7.

3. IMMEDIATELY INSPECT BACK OIL PRESSURE GAUGE TO INSURE THAT PRESSURE IS NOT HIGHER THAN 50 PSIG. SHUT UNIT DOWN TO INVESTIGATE IF PRESSURE INCREASES PAST 50 PSIG. SEE TROUBLESHOOTING GUIDE IN SECTION 8 FOR HELP.

   MONITOR THIS PRESSURE REGULARLY.

6. IMMEDIATELY INSPECT OIL FLOW PORT TO INSURE THAT OIL IS FLOWING OUT OF PHOENIX.

   MONITOR THIS FLOW REGULARLY

(SECTION 5: Unit Startup - Continued)

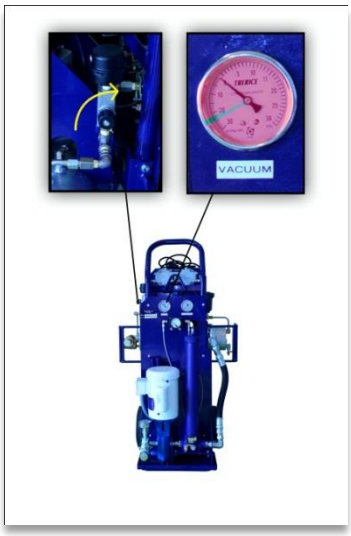

7. START VACUUM PUMP FOLLOWING INSTRUCTIONS IN SECTION 6. INSURE IT IS RUNNING BY CHECKING THAT COOLING FAN OF VACUUM PUMP MOTOR IS TURNING. ADJUST VACUUM LEVEL TO BETWEEN 25” AND 27” OF MERCURY BY TURNING VACUUM ADJUSTMENT KNOB. TURN CLOCKWISE FOR MORE VACUUM AND COUNTER CLOCKWISE FOR LESS VACUUM. LOCK KNOB IN PLACE ONCE SET.

   IMPORTANT NOTE: DO NOT COMPLETELY CLOSE VALVE. SOME SWEEP AIR IS REQUIRED TO MOVE MOISTURE AWAY FROM MEMBRANE SURFACE.

8. MONITOR PARTICULATE FILTER DIFFERENTIAL INDICATOR REGULARLY. CHANGE FILTER WHEN WHITE INDICATOR HAS MOVED FROM GREEN TO RED INDICATION.

   TO CHANGE FILTER IT IS BEST TO PUMP PHOENIX OUT FIRST BY TURNING UNIT OFF AND DISCONNECTING SUPPLY HOSE FROM RESERVOIR. TURN PHOENIX BACK ON AND ALLOW TO PUMP OUT BACK TO THE RESERVOIR FOR A MINUTE.

   TURN PHOENIX OFF AND REMOVE AND INSTALL NEW FILTER USING A STRAP WRENCH. MAKE SURE TO USE ONLY AN MSC APPROVED FILTER OR PERMANENT DAMAGE TO MEMBRANE BUNDLE MAY OCCUR. SEE SPARE PARTS SECTION FOR RECOMMENDED FILTER SIZES.

(SECTION 5: Unit Startup – Continued)

9. OCCASIONALY DURING VERY HIGH WATER IN OIL CONTAMINATION LEVELS - WATER CONDENSATION MAY BECOME PRESENT IN VACUUM LINE. DURING THOSE TIMES IT MAY BE NECESSARY ON OCCASION TO CHECK CONDENSATION DRAIN LINE FOR ACCUMULATED MOISTURE AND DRAIN. TO DO THIS – TURN OFF AIR SUPPLY AND THEN OPEN DRAIN VALVE LOCATED UNDER MEMBRANE HOUSING. NO PRESENCE OF CONDENSATION DOES NOT MEAN THAT THE PHOENIX IS NOT WORKING, ONLY THAT WATER LEVELS ARE NOT HIGH ENOUGH IN OIL TO CAUSE CONDENSATION TO FORM.

   A SMALL AMOUNT OF OIL MAY PASS THROUGH THE MEMBRANE AND CONDENSE IN THIS LINE AS WELL WHICH IS NORMAL AND SHOULD BE DRAINED. HOWEVER, IF LARGE AMOUNTS OF OIL ARE PRESENT PLEASE CONTACT YOUR PHOENIX REPRESENTATIVE.

SECTION 6:

OPTIONAL AQUATREX SYSTEM PLC TOUCHSCREEN OPERATION

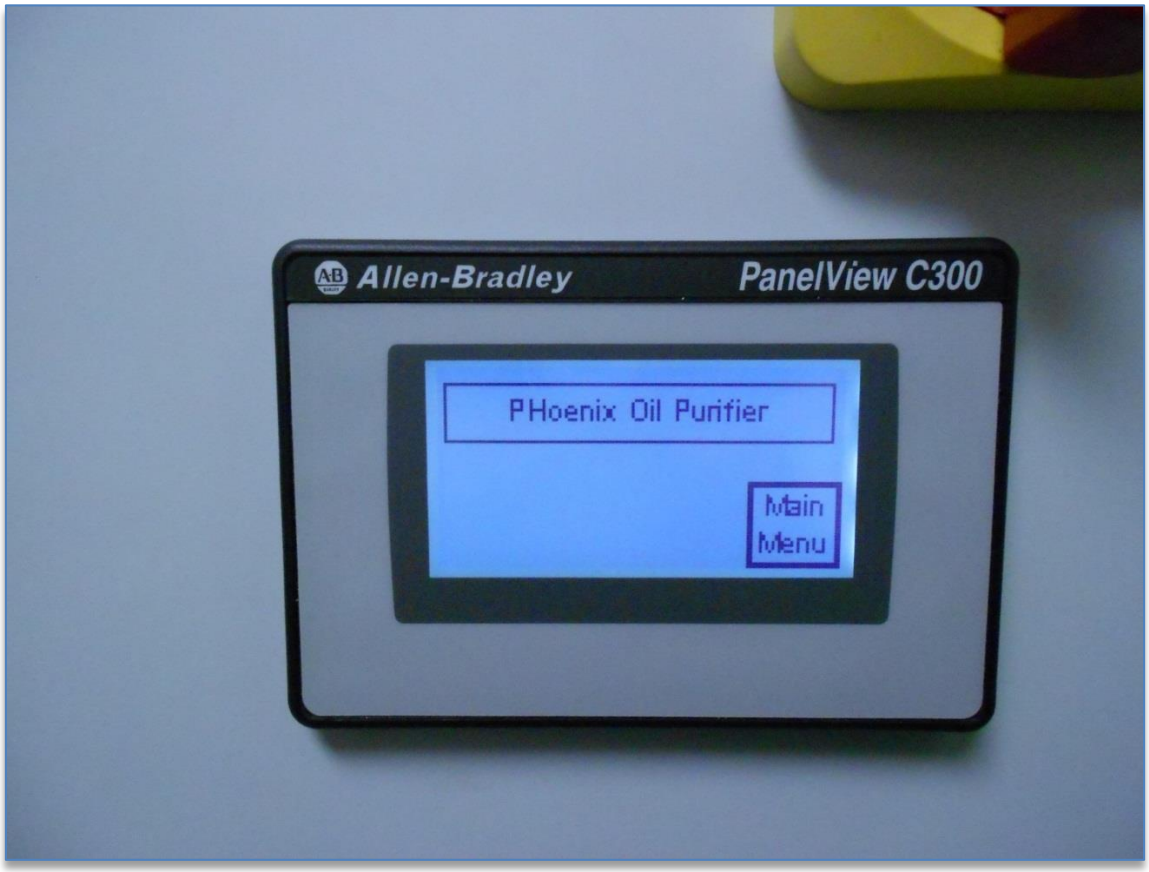

Description:

The optional Aquatrex touchscreen and Pall WS10 water sensor provide several unique tools to understand and track the water ingression levels in a lube or hydraulic system. The Phoenix touchscreen provides the ability to read water contamination in real time in percent saturation (up to 100%). In addition, the Aquatrex allows high and low water set points to be manually programed into the PLC allowing it to automatically turn on or off the water removing vacuum pump depending on the amount of water in the oil. There is also a resettable vacuum pump run time meter and a cycle counter to track how long and how often the vacuum pump needs to run to remove any water present in the oil. This feature allows operators to track the performance of the Phoenix over time and monitor the amount of ingression into a system. The Aquatrex will also automatically shut down the Phoenix in the event the fluid pump is subjected to an inlet vacuum of 25” or higher due to an exceeded oil viscosity limit or a closed inlet valve preventing oil from getting to the pump. The Aquatrex will automatically try to turn the Phoenix back on every hour if it shuts down due to high inlet vacuum.

(SECTION 6: PLC Touchscreen Operation - Continued)

READING WATER LEVELS

1. ACCESS THE WATER SENSOR SCREEN BY PUSHING THE MAIN MENU BUTTON.

2. THE % SATURATION OF WATER IN THE OIL IS DIPLAYED IN REAL TIME IN THE WATER SENSOR MENU.

3. IF THE % SATURATION VALUE IS BETWEEN THE HIGH AND LOW SET POINTS YOU CAN START THE VACUUM PUMP CYCLE BY MANUALY PUSHING THE CYCLE START BUTTON

4. YOU CAN ALSO MANUALY STOP THE VACUUM PUMP BY HITTING THE CYCLE STOP BUTTON. THE VACUUM PUMP WILL STAY OFF UNITL THE % SATURATION INCREASES ABOVE THE HIGH WATER SET POINT IN SET POINT MENU

(SECTION 6: PLC Touchscreen Operation - Continued)

HIGH AND LOW WATER SET POINTS

1. ACCESS THE WATER LEVEL SET POINTS FROM THE MAIN MENU BUTTON

2. YOU MAY SET EITHER THE HIGH OR LOW SET POINTS BY PRESSING THE HIGHLIGHTED BUTTONS ON THE TOUCH SCREEN. THE WATER REMOVAL VACUUM PUMP WILL AUTOMATICALLY TURN ON WHEN THE HIGH SET POINT IS REACHED AND TURN OFF WHEN THE LOW SET POINT IS REACHED.

   IF YOU WISH TO HAVE THE WATER REMOVAL VACUUM PUMP RUN ALL THE TIME REGARDLESS OF WATER LEVELS THEN SET BOTH THE HIGH AND LOW SET POINTS TO 0.

   CONVERSELY IF YOU WISH TO NOT HAVE THE VACUUM PUMP RUN REGARDESS OF WATER SET POINTS THEN SET THEM BOTH TO 100%

(SECTION 6: PLC Touchscreen Operation - Continued)

VACUUM RUNTIME METER AND CYCLE COUNTER

1. ACCESS THE RUN TIME AND CYCLE COUNT METER VIA THE MAIN MENU BY PUSHING THE RUN TIME BUTTON.

2. THE TOTAL RUN TIME FOR THE VACUUM PUMP FOR CURRENT SESSION IS SHOWN. THIS TOTAL TIME HAS COMPOUNDED SINCE THE LAST RESET OF THE CLOCK. IN ADDITION, THERE IS A CYCLE COUNTER WHICH RECORDS HOW MANY TIMES THE VACUUM PUMP HAD TO TURN ON AND OFF SINCE THE LAST RESET.

3. BOTH THE RUN TIME METER AND CYCLE COUNTER CAN BE RESET BACK TO 0 USING THE RESET BUTTON.

   IMPORTANT NOTE: BE SURE TO RECORD THE TIME AND CYCLE COUNT IF NEEDED BEFORE RESETTING SINCE ANY PREVIOUS TIMES OR CYCLES WILL BE LOST.

SECTION 7:

Phoenix PREVENTATIVE MAINTENANCE AND RECOMMENDED SPARE PARTS

IMPORTANT NOTE: There is very little preventative maintenance required for the Phoenix Purifier. The amount required is limited to the vacuum pump, and replacement of the USRT particulate filter and the inlet breather filter. There is no maintenance required on the water removal membrane which **is not field serviceable**. Always operate the Phoenix with at least a 12-micron Pall USRT Filter Element installed in the Pall USRT Particulate filter housing and also a breather filter per Figure 13 below or premature damage to the water removal membrane may occur

RECOMMENDED SPARE PARTS LIST

PART NUMBER	DESCRIPTION	REPLACEMENT INTERVAL
MSCP568665	8 MICRON BETA 2000 SPIN ON PARTICULATE FILTER	6 MONTHS OR AS NEEDED
PHXC4KIT	6000 HR PM SERVICE KIT FOR PHOENIX C4. INCLUDES 2 VACUUM PUMP SEAL KITS AND BREATHER FILTER	6000 HRS OF VACUUM PUMP RUN TIME

Figure 12 – Recommended Vacuum Pump Preventative Maintenance

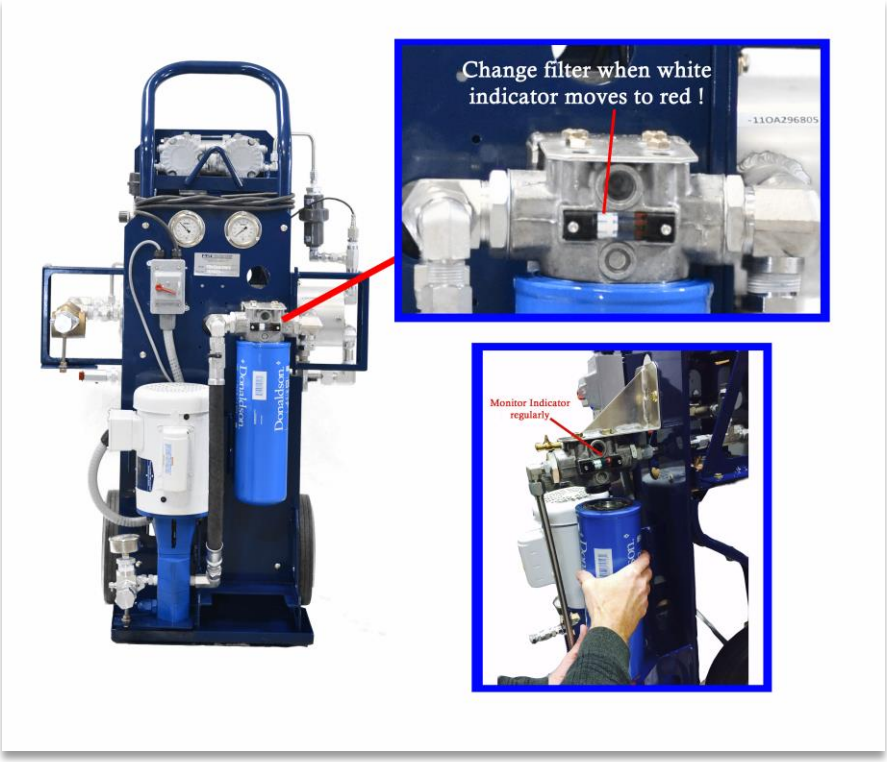

Figure 13 – Recommended Filter Element Change-out.

SECTION 8: TROUBLE SHOOTING GUIDE

This is only a guide. If these recommendations do not solve the problem, please contact your Sales representative for further help.

PROBLEM DESCRIPTION	POSSIBLE CAUSE/SOLUTION
NO POWER TO UNIT OR UNIT WILL NOT RUN	• **Insure Phoenix is plugged into 110V power and make sure there is power to that source.** • **Non Aquatrex Models – check GFI switch on power cord. See page 9 box 2.** • **Aquatrex - Check that all breakers and fuses in the Phoenix control box not tripped. Reset or replace if necessary.** • **Disconnect Power to the Phoenix and make sure that all wiring inside is tight and**
POWER TO UNIT - BUT VACUUM PUMP DOES NOT RUN.	• **Make sure you follow instruction on page 13 of this manual on how to start the cycle** • **Check moisture content in moisture sensor screen see pages 13 -15 in regards to reading moisture level in oil and setting high and low set points. The vacuum pump will not run if the moisture level of the oil is below the low set point. Adjust set points as necessary and lower low set point below the actual level in the oil. Set both high and low moisture set points to 0 if you wish to have vacuum pump run all the time regardless of moisture level.** • **Check vacuum pump fuse – see electrical schematic for location.**
POWER TO UNIT – HIGH VACUUM ALARM – UNIT SHUTS DOWN 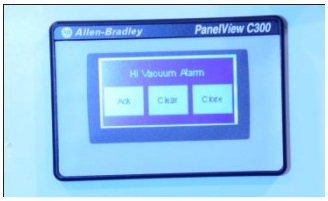	• **Start Phoenix and monitor inlet fluid pump vacuum gauge. See page 5 - figure 6 item 1. Make sure when the unit turns on that vacuum on gauge does not increase above 25". If vacuum is higher than 25" shut down unit and correct obstruction or increase diameter of inlet hose or connection. Make sure hose is no smaller than 1" and hose connection is not smaller than 3/4". Clear Alarm and restart. Use as small a length of inlet hose as possible to limit inlet vacuum**

(SECTION 8: Trouble Shooting Guide – Continued)

PROBLEM DESCRIPTION	POSSIBLE CAUSE/SOLUTION
LOW OR NO VACUUM ON VACUUM GAUGE DESPITE VACUUM PUMP RUNNING.	• **See page 11 section 7 –on adjusting vacuum control knob.** • **Check Vacuum Gauge (Section 3, Figure 6, Item 8) to insure it is reading properly. Replace if necessary** • **See Page 5, Figure 7 Item 15 – condensation drain valve and make sure it is fully closed.** • **See page 17 Section 7 Figure 12 on replacing vacuum pump seals if over 6000 hrs. of run time.** • **Look through sight gauge (Page 5, Figure 8, Item 18) to see if condensation or leaking oil has built up in vacuum line. If liquid is present shut down unit and open condensation drain valve to remove moisture. If only water is present – drain and start back up.** **IMPORTANT NOTE: A SMALL AMOUNT OF OIL IS NORMAL HOWEVER IF OIL IS PRESENT IN VACUUM DRAIN LINE THIS MAY INDICATE A COMPROMISED MEMBRANE. SHUT UNIT DOWN AND CONTACT YOUR SALES REPRESENTATIVE.**
PRESSURE HIGHER THAN 50 PSIG PRESSURE ON GAUGE (page 5 figure 8 item 17)	• **Make sure Pressure Gauge is reading correctly and 0's out when unit is shut down. If not, then replace gauge.** • **Check for obstruction upstream in return line and remove any obstructions or blockage. See page 7 for recommended installation procedure.** • **Make sure particulate filter is not plugged. Check dp gauge.**
VACUUM LEVEL HIGH ON VACUUM GAUGE BUT VACUUM LEVEL UNRESPONIVE WHEN VACUUM CONTROL VALVE IS TURNED.	• **Breather Filter Plugged. See Page 17 Section 7 Figure 13 for replacement part.** • **Check inlet check valve just below breather filter to insure it is not stuck shut.**
FLUID PUMP RUNNING BUT SPINNING INDICATOR NOT TURNING AND NO FLOW OUT OF PHOENIX	• **Check Particulate Filter Plugged Indicator page 17 figure 13 to make sure particulate filter is not plugged. If filter plugs fluid pump will relieve on itself and there will be no flow out of Phoenix. Replace Particulate Filter if necessary. Page 11 box 8.**

(SECTION 8: Trouble Shooting Guide – Continued)

PHOENIX C FLUSHING PROCEDURE

IT IS RECOMMENDED THAT WHEN USING THE PHOENIX WITH MORE THAN ONE TYPE OF OIL THAT IT BE FLUSHED OUT BEFORE CHANGING TO ANOTHER OIL. THIS WILL PREVENT OIL CROSS CONTAMINATION IN RESERVOIRS. IT IS BEST TO HAVE AN OIL PAN AVAILABLE.

STEP 1 – Turn Phoenix off

STEP 2 – Disconnect inlet hose from oil reservoir. Remove any quick disconnect hydraulic coupling from end of hose if used so that air can be pumped through Phoenix.

STEP 3 - Leave outlet hose connected to oil reservoir so any oil in Phoenix can be pumped back in without loss.

STEP 4 - Power on Phoenix and allow oil to pump out and back into reservoir. Watch outlet Oil flow sight glass (see page 11 – item 6) till there is no more oil coming out. Should take approximately 1 – 2 minutes max. Turn Off.

STEP 5 - Disconnect Particulate Housing Vent Line and place oil pan at bottom of particulate filter housing sample valve (see page 5 item 11 for location of valve) and open valve. Allow all oil from housing to drain into pan – may take up to 10 minutes.

STEP 6 - It is recommended that when using the Phoenix on different oils that the particulate filter element be changed between oils to prevent cross contamination. Change filter element based on steps 2 & 3 on pages 9 &10

STEP 7 - Leave vent on particulate filter housing off and then move oil pan from step 5 to under membrane housing drain valve (see page 5 figure 8 tem 17) . Open valve and drain housing of as much oil as. Once oil is drained from housing close valve and reattach particulate housing vent line.

STEP 6 - Fill a 5-gallon bucket of oil with approximately 3 gallons of new oil. Insert inlet and outlet hoses into bucket and flush new oil through Phoenix for About 5 minutes.

Phoenix is now flushed out and ready to run on new oil.

SECTION 9: DRAWINGS AND DATA SHEETS

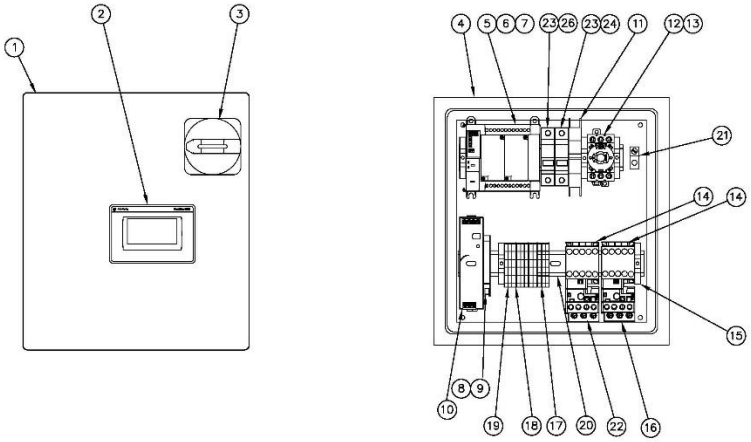

ITEM	QTY	PART NO.	DESCRIPTION	MANUFACTURER
1	1	AM1006L	FIBERGLASS ENCLOSURE	ALLEN
2	1	2711H15L1M	PANELVIEW PLUS	ALLEN BRADLEY
3	1	1492-SH3E	DISCONNECT OPERATING HANDLE	ALLEN BRADLEY
4	1	2080-LC30-48QBB	MICROLOGIX	ALLEN BRADLEY
5	1	2085-IQ8OB8-10QWB	MICROVISED CONTROLLER	ALLEN BRADLEY
6	1	2085-IF2	2-CH VI ANALOG INPUT	ALLEN BRADLEY
7	1	1761-CBL-AP00	CABLE, MICROLOGIX 1000 CONTROLLER	ALLEN BRADLEY
8	1	1492-H4	FUSE HOLDER	ALLEN BRADLEY
9	1		FUSE	
10	1	1606XLE120E	120W POWER SUPPLY	ALLEN BRADLEY
11	1	1489A1C050	CIRCUIT BREAKER 5A	ALLEN BRADLEY
12	1	194EA101T53	ROTARY DISCONNECT	ALLEN BRADLEY
13	1	194ES2S075	DISCONNECT SIDE	ALLEN BRADLEY
14	1	100-C09Z01	MICR MINI CONTACTOR, 9A	ALLEN BRADLEY
15	3	1492-EAL36	END ANCHOR	ALLEN BRADLEY
16	1	193-JB3J2	MINI BIMETAL OVERLOAD RELAY	ALLEN BRADLEY
17	3	1492-J4G6	TERMINAL BLOCK, GROUND	ALLEN BRADLEY
18	3	1492-EB3J3	END BARRIER	ALLEN BRADLEY
19	6	1492-J3	TERMINAL BLOCK, BLUE	ALLEN BRADLEY
20	AR	199-DR1	DIN RAIL	ALLEN BRADLEY
21	1	1-A-2	GROUND LUG	LUGGO
22	1	193-XK10	MINI BIMETAL OVERLOAD RELAY	ALLEN BRADLEY
23	2	1492-FB1J1(30)	1 POLE, 30A CLASSB, CCK CLASS CC	ALLEN BRADLEY
24	1	LP-DC-S1	LP-DC-S1	BUSSMANN
25	1	1770KM2U16	MC2 MINI CONTACTOR, 16A	ALLEN BRADLEY
26	1	LP-DC-3	LP-DC-3	BUSSMANN

NOTICE:
THIS DRAWING IS THE PROPERTY OF MSC FILTRATION TECHNOLOGIES REPRODUCTION FOR THE PURPOSE OF MANUFACTURING IS SUBJECT TO LEGAL ACTION.

MSC FILTRATION TECHNOLOGIES
198 FRESHWATER BLVD ENFIELD, CT. 06082

TITLE: C4-CART- ENCLOSURE LAYOUT

DRAWN BY	SIZE	DWG NO.	REV
DLK	D	272660301	A
DATE: OCT 29, 2012	SCALE: N/A	REV. DATE	SHEET 1 OF 3

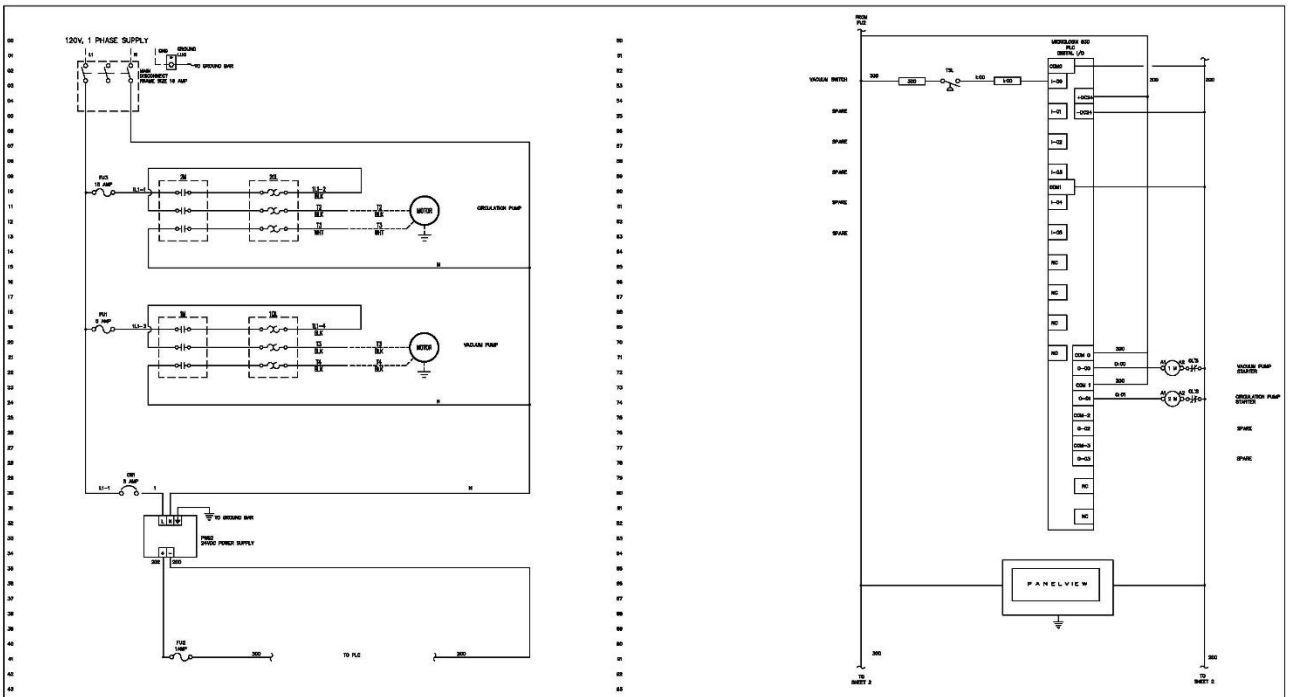

NOTICE:
THIS DRAWING IS THE PROPERTY OF MSC FILTRATION TECHNOLOGIES REPRODUCTION FOR THE PURPOSE OF MANUFACTURING IS SUBJECT TO LEGAL ACTION.

MSC FILTRATION TECHNOLOGIES
198 FRESHWATER BLVD ENFIELD, CT. 06082

TITLE: C4-CART- CONTROL SCHEMATIC

DRAWN BY	SIZE	DWG NO.	REV
DLK	D	272660302	A
DATE: OCT 29, 2012	SCALE: N/A	REV. DATE	SHEET 2 OF 3

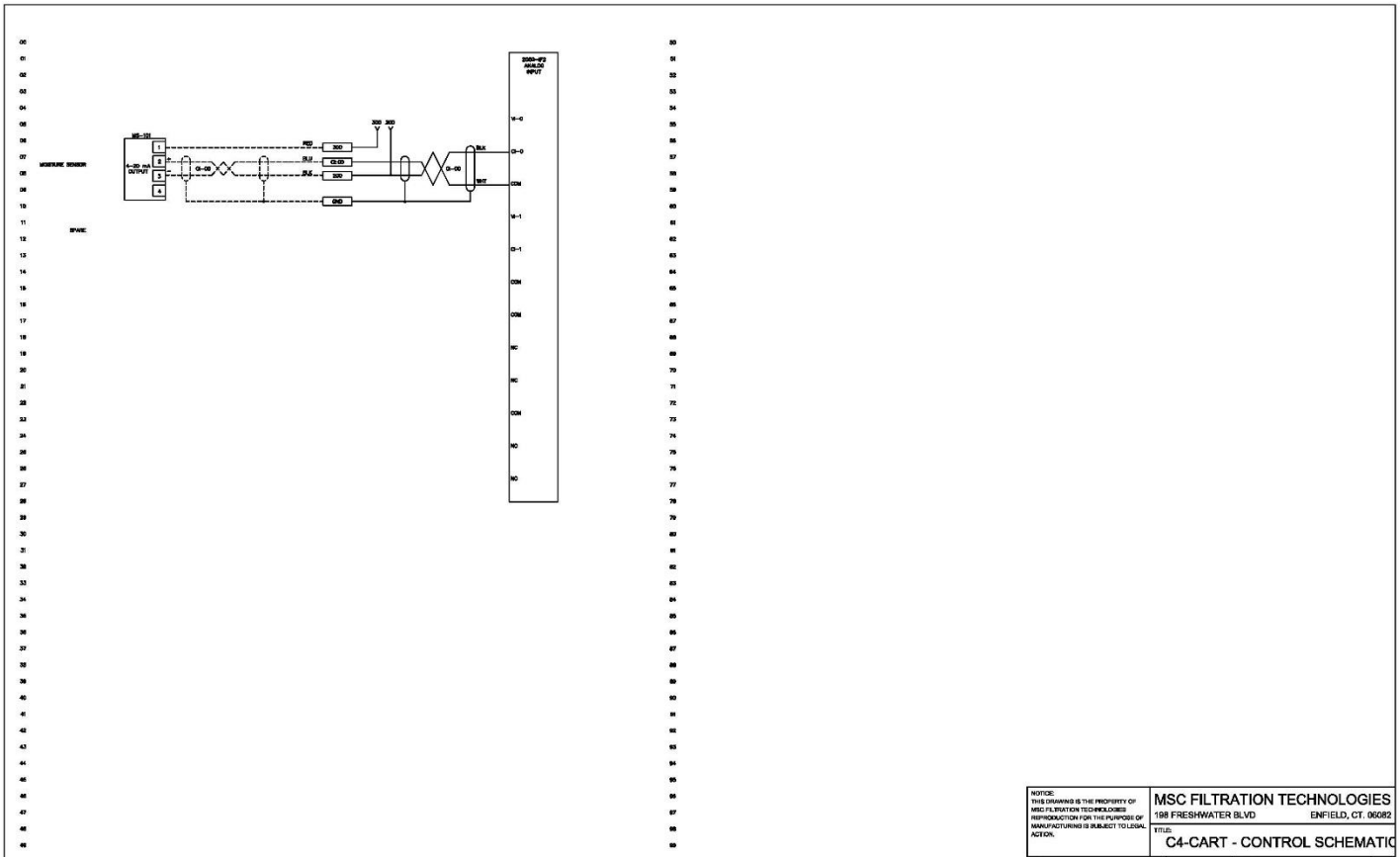

NOTICE:
THIS DRAWING IS THE PROPERTY OF MSC FILTRATION TECHNOLOGIES REPRODUCTION FOR THE PURPOSE OF MANUFACTURING IS SUBJECT TO LEGAL ACTION.

MSC FILTRATION TECHNOLOGIES
198 FRESHWATER BLVD ENFIELD, CT. 06082

TITLE: C4-CART - CONTROL SCHEMATIC

DRAWN BY	SIZE	S/N	DWG NO.	REV
DLK	D		272660303	A
DATE	SCALE	REV. DATE	SHEET	
OCT 29, 2012	N/A		3 OF 3	

GAST

A UNIT OF IDEX CORPORATION

IDEX CORPORATION

70-7050 G505PL (Rev. E)

SOA/SAA/LOA/LAA OIL-LESS VACUUM PUMPS & COMPRESSORS OPERATION & MAINTENANCE MANUAL

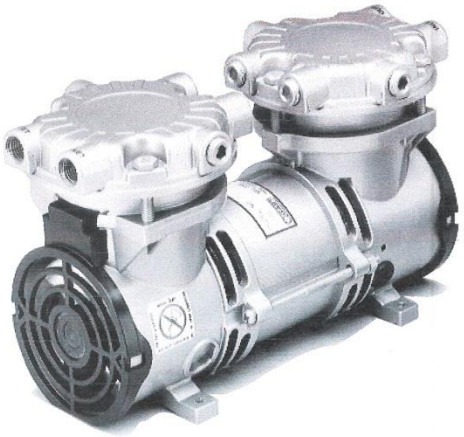

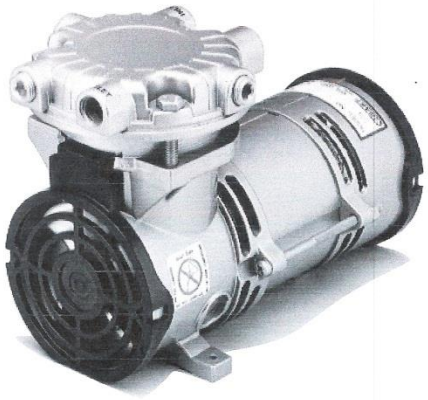

CONTENTS:

General Information and Installation 2

Operation 3

Maintenance and Shut-Down Procedures 4

SAA/LAA Exploded View and Parts Ordering Information 5

SOA/LOA Exploded View and Parts Ordering Information 6

Service Kit Installation and Troubleshooting Guide 7

Warranty and Authorized Service Facilities 8

Visit us at our website
www.gastmfg.com

KEEP THIS DOCUMENT FOR FUTURE REFERENCE

This is the hazard alert symbol: ⚠. When you see this symbol, be aware that personal injury or property damage is possible. The hazard is explained in the text following the symbol. Read the information carefully before proceeding.

The following is an explanation of the three different types of hazards:

⚠ **DANGER** Severe personal injury or death will occur if hazard is ignored.

⚠ **WARNING** Severe personal injury or death can occur if hazard is ignored.

⚠ **CAUTION** Minor injury or property damage can occur if hazard is ignored.

GENERAL INFORMATION

This unit is designed for moving air only and under no circumstances is to be used with any other gases, fluids, particles, solids, or any substance mixed with air.

⚠ **DANGER** Pumping flammable or explosive gases or operating this unit in an atmosphere containing them can result in fire or explosion damage to unit and surrounding environment.

⚠ **CAUTION** Do not allow corrosive gases or particulate material to enter unit. Water vapor, oil-based contaminants, or other liquids must be filtered out. Foreign materials will damage unit by gumming up parts and causing unit to fail.

⚠ **CAUTION** This unit's exhaust air can become very hot. Hot exhaust air can damage temperature-sensitive equipment and will burn skin if exposed to air stream.

Ambient temperature should not exceed 40°C (104°F). For operation at high temperatures, consult the factory.

Performance is reduced by low atmospheric pressure found at high altitudes. Consult a Gast distributor for details.

Never lubricate this oil-less piston unit. Most components are made of aluminum and valves are stainless steel.

INSTALLATION

⚠ **WARNING** To avoid risk of electrocution do not use this product in an area where it could come in contact with water or other liquids. If exposed to the elements unit must be weather-protected.

⚠ **WARNING** Beware of any exposed and/or movable parts. Proper guards should be in place to prevent personal and/or property damage.

⚠ **CAUTION** Do not block flow of cooling air over unit in any way. This will cause unit to overheat.

Mounting

Unit may be installed in any orientation as long as flow of cool, ambient air over unit is not blocked. To reduce noise and vibration, use shock mounts and affix unit to a stable, rigid operating surface.

⚠ **CAUTION** Remove plastic plugs in ports before starting unit to avoid flying projectile and/or lack of performance.

Wiring

⚠ **WARNING** Incorrect wiring can result in electric shock and cause permanent damage to unit.

Wiring must conform to all required safety codes and be installed by a qualified person. Grounding is required. All power to motor must be de-energized and disconnected when servicing.

Grounding Instructions

These instructions apply to 120-volt units and where indicated to units wired for 220-240 volts. See motor nameplate on unit for voltage requirements.

For all grounded, cord-connected products:

This product should be grounded. In the event of an electrical short circuit, grounding reduces the risk of electric shock by providing an escape wire for the electric current this product is equipped with a cord having a grounding wire with an appropriate grounding plug. The plug must be plugged into an outlet that is properly installed and grounded in accordance with all local codes and ordinances.

⚠ **DANGER** *Improper installation of the grounding plug can result in a risk of electric shock. If repair or replacement of the cord or plug is necessary, do not connect the grounding wire to either flat blade terminal. The wire with insulation having an outer surface that is green with or without yellow stripes is the grounding wire.*

Check with a qualified electrician or serviceman if the grounding instructions are not completely understood, or if in doubt as to whether the product is properly grounded. Do not modify the plug provided; if it will not fit the outlet, have the proper outlet installed by a qualified electrician.

For a grounded, cord-connected product rated less than 15 amperes and intended for use on a nominal 120 volt supply circuit:

This product is for use on a nominal 120-volt circuit and has a grounding plug that looks like the plug illustrated in Figure 1. Make sure that the product is connected to an outlet having the same configuration as the plug. No adapter should be used with this product

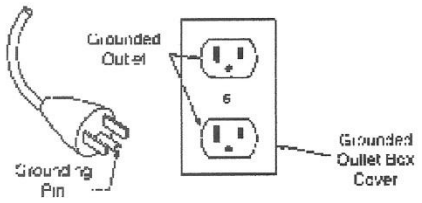

Figure 1

For all other grounded, cord-connected products:
This product is for use on a circuit having a nominal rating more than 120 volts (or 220-240 volts) ...and is factory-equipped with a specific electric cord and plug to permit connection to a proper electric circuit. Make sure that the product is connected to an outlet having the same configuration as the plug. No adapter should be used with this product if the product must be reconnected for use on a different type of electric circuit, the reconnection should be made by qualified service personnel.

For a permanently connected product:
This product should be connected to a grounded, metallic, permanent wiring system, or an equipment-grounding terminal or lead on the product

Extension Cords:
Use only a 3-wire extension cord that has a 3-blade grounding plug, and a 3-slot receptacle that will accept the plug on the product Make sure your extension cord is in good condition. When using an extension cord, be sure to use one heavy, enough to carry the current your product will draw. For lengths less than 25 feet, No.18 AWG extension cords should be used. An undersized cord will cause a drop in line voltage resulting in loss of power and overheating.

Exception: A 2-conductor or 3-conductor extension cord may be used for a double-insulated or 2-wire product.

Refer to wiring tag supplied with unit, for diagram and capacitor option. For any DC unit - red lead goes to positive side of power source.

Plumbing
To prevent air flow restriction, use pipe and fittings that are same size or larger than unit's threaded ports.
NOTE: Be sure to connect intake and exhaust plumbing to correct inlet and outlet ports.

Accessories
Filters and mufflers are supplied on some models. Check periodically and replace when necessary. Consult a Gast Representative for filter recommendations. For best results, install relief valves and gauges at inlet or outlet, or both, to monitor performance.

Electric Motor Control
Motor must be protected against short circuit, overload and excessive temperature rise. Fuses, motor-protective switches and thermal-protective switches provide necessary protection in these circumstances. Fuses only serve as a short circuit protection of motor (wiring fault). Fuses in the incoming line should be chosen so as to be able to withstand the starting current of the motor, not as a protection against overload.

Motor starters, incorporating thermal-magnetic overload or circuit breakers protect motor from overload or reduced voltage conditions.

Selection of correct overload setting is required to provide best possible protection. Refer to motor starter manufacturer's recommendations.

OPERATION

⚠ WARNING Solid or liquid material exiting unit can cause eye or skin damage. Keep away from air stream.

⚠ WARNING Disconnect power before servicing to avoid electric shock or accidental start-up. The motor may be thermally protected and will restart automatically when it cools if the thermal protection switch is tripped.

⚠ WARNING Do not operate without grille(s), if provided, in place. Failure to do so could result in severe personal injury.

⚠ WARNING Head surface(s) can be very hot depending on unit duty and speed. Do not touch these parts during operation.

⚠ CAUTION Do not operate units above recommended pressures or vacuum duties. This will overheat unit.

Starting

If unit is extremely cold let it warm up to room temperature before starting. If unit does not operate properly, see troubleshooting guide on page 7. Do not start against a vacuum or pressure load.

NOTE: Some of these models may exceed 70 dB(A). When in close proximity to these models hearing protection is required. Refer to Technical Data Sheet for specific model.

MAINTENANCE

Filter Inspection and Replacement

Intake filter and mufflers require periodic inspection and replacement. Initial inspection is suggested at 500 hours, then user should determine frequency thereafter. Most problems can be prevented by keeping filters and mufflers clean. Dirty filters and mufflers decrease unit performance and can decrease unit life.

⚠ **WARNING** Do not touch unit cylinders and heads as they becomes very hot during operation and will burn skin on contact. Wait until unit has been turned off and allowed to cool before touching it.

⚠ **WARNING** Disconnect power before servicing to avoid electric shock.

Some filter element(s) are held together by a snap fit.

Refer to exploded view during the following procedure.

1. Turn off unit.
2. Isolate from power source.
3. Release all pressure and vacuum from unit.
4. Remove filter cover.
5. Inspect filter felt.
6. Replace felt if it is completely covered with contamination or has indicated an increase in differential pressure.
7. Assemble felt and filter cover.
8. Check for any damage to external accessories such as relief valves and gauges, before putting unit back into service.

SHUTDOWN PROCEDURES

Proper shutdown procedures must be followed to prevent unit damage. Failure to do so may result in premature unit failure. Gast Manufacturing oil-less units are constructed of ferrous metals or aluminum which are subject to rust and corrosion when pumping condensable vapors such as water.

Follow steps below to assure correct storage and shutdown between use:

1. NEVER oil this oil-less unit.
2. After using this unit, disconnect plumbing and allow unit to run "open" for at least 5 minutes before shutdown.
3. Plug open ports to prevent dirt or other contaminants from entering unit.

It is now ready for shutdown or storage.

SAA/LAA EXPLODED VIEW & PARTS ORDERING INFORMATION

SAA-P107-NQ

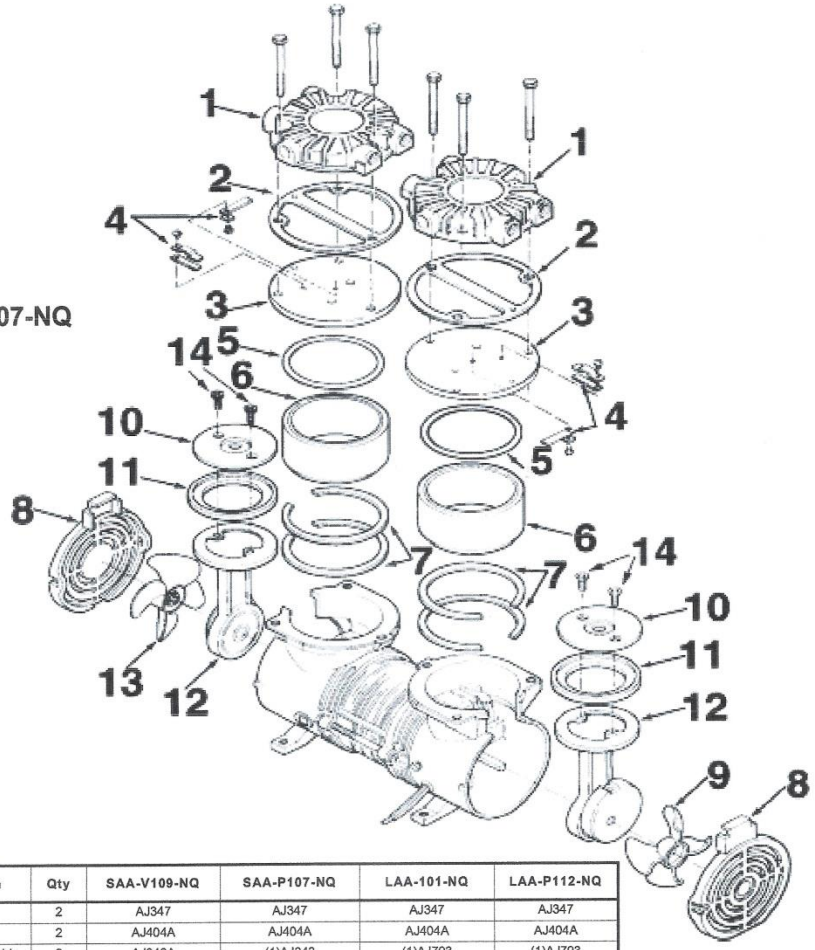

Ref No	Description	Qty	SAA-V109-NQ	SAA-P107-NQ	LAA-101-NQ	LAA-P112-NQ
1	Head	2	AJ347	AJ347	AJ347	AJ347
*2	Head Gasket	2	AJ404A	AJ404A	AJ404A	AJ404A
*3	Valve Plate Assembly ('valves included)	2	AJ343A	(1)AJ343 (1) AJ343A	(1)AJ793 (1) AK394	(1)AJ793 (1) AK394
4	Valves*	4	AF817	AF817	(2) AG973 (2) AJ827	(2) AG973 (2) AJ827
*5	O-ring	2	AH179	AH179	AH179	AH179
6	Cylinder	2	AJ342	AJ342	AJ375B	AJ375B
7	Shims	as req.	AJ345	AJ345	AJ345	AJ345
8	Grille	2	AG774B	AG774B	AG774B	AG774B
9	Fan	1	AJ856	AJ856	AJ856	AJ856
10	Retainer Plate	2	AH177B	AH177B	AK377	AK377
*11	Cup	2	AH175	AH175	AJ826	AJ826
12	Connecting Rod	2	AJ338A	AJ308F	AK380D	AK380D
13	Fan	1	AF785B	AF785B	AF785B	AF785B
*14	Retainer Plate Screws	4	BB557	BB557	BB557	BB557
	Service Kit	2	(2) K757	(1) K756 (1) K757	(1) K767 (1) K773	(1) K767 (1) K773

*Denotes parts included in Service Kit. Parts listed are for stock models. For specific OEM models consult the factory.
When corresponding or ordering parts, please give complete model and serial numbers.

SOA/LOA EXPLODED VIEW & PARTS ORDERING INFORMATION

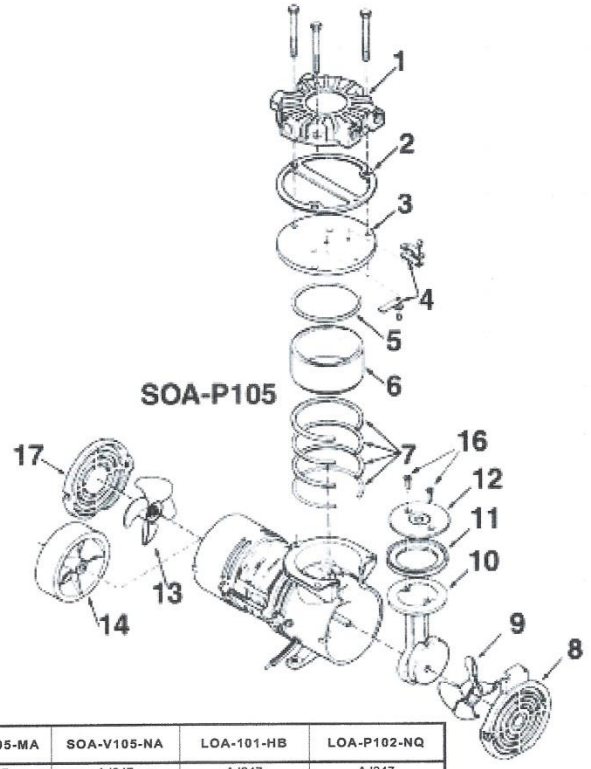

Ref No	Description	Qty	SOA-P105-MA	SOA-V105-NA	LOA-101-HB	LOA-P102-NQ
1	Head	1	AJ347	AJ347	AJ347	AJ347
*2	Head Gasket	1	AJ404A	AJ404A	AJ404A	AJ404A
*3	Valve Plate Assembly (*valves included)	1	AJ343H	AJ343A	AJ793	AJ793
4	Valves*	2	AH693	AF817	(1) AG973 (1) AJ827	(1) AG973 (1) AJ827
*5	O-ring	1	AH179	AH179	AJ787	AJ787
6	Cylinder	1	AJ342	AJ342	AJ375B	AJ375B
7	Shims	as req.	AJ345	AJ345	AJ345	AJ345
8	Front Grille	1	AG774B	AG774B	AG774B	AG774B
9	Fan	1	AJ856	AJ856	AJ856	AJ856
10	Connecting Rod Assembly	1	AJ308D	AJ338A	AK380B	AK380
*11	Cup	1	AH175	AH175	AJ826	AJ826
12	Retainer Plate	1	AH177B	AH177B	AK377	AK377
13	Fan	1	AF785B	AF785B	AF785B	
14	Inertia Fan	1				AJ677
15	Tolerance Ring	1				AJ904
*16	Retainer Plate Screws	2	BB557	BB557	BB557	BB557
17	Grille	1	AG744	AG744	AG744	
	Dowel Pin (Not Illustrated)	1				AK487
	Service Kit	1	K760	K757	K767	K767

*Denotes parts included in Service Kit. Parts listed are for stock models. For specific OEM models consult the factory.
When corresponding or ordering parts, please give complete model and serial numbers.

SERVICE KIT INSTALLATION

NOTE: Gast will not guarantee performance of a field-rebuilt unit. Return unit to a Gast Authorized Service facility, or perform rebuild procedures described below.

Kits contain most or all of the following: Head Gasket, Valve Plate Assembly, Retainer Plate Screws, O-ring, and Cup.

Kits are used for several models and may contain extra parts not applicable for your specific model. Refer to exploded view.

Disassembly:

1. Disconnect unit from power source.

⚠ **WARNING** Disconnect power before servicing to avoid electric shock.

2. Vent all air lines to unit to remove pressure.

⚠ **WARNING** Vent all air lines to unit to remove pressure before servicing it. Failure to do so can result in severe personal injury.

3. Remove head bolts.
4. Remove gasket, head, and valve plate assembly *(Note orientation of head assembly for re-assembly)*.
5. Carefully remove cylinder and shims *(Be sure to replace all shims, as they are matched to cylinder and rod assembly height dimensions)*. Remove two retainer plate screws on retainer plate *(may require heat to break adhesive on retainer screws)* and discard old cup.
6. Clean residue from cylinder walls with soft cloth using non-petroleum, non-oil-based solvent. DO NOT use kerosene, gasoline, or any flammable substance.

Re-assembly:

7. Replace cylinder and shims.
8. Place retainer plate in new cup and push both down into cylinder.
9. Install new retainer plate screws and torque to 35 in-lbs.
10. Install O-ring into groove of cylinder
11. Install valve plate, head gasket *(note gasket orientation)*, and head, on cylinder so ports are in original orientation.
12. Install and snug all head bolts and torque to 80 in-lbs.

NOTE: Before putting unit into service, ensure that any external accessories such as relief valves and gauges attached to head have not been damaged.

TROUBLESHOOTING GUIDE

Possible Reason	Pressure		Low Vacuum	Excessive Noise	Overheating	Won't Start
	Low	High				
Dirty Filter	X				X	
Dirty Muffler			X		X	X
Dirty Valves	X		X			
Damaged Valves	X		X	X		X
Damaged/Worn Cup	X		X			
Improper Cylinder Shimming	X	X	X	X	X	X
Leaky Hose	X		X			
Leaky Check Valve						X
Plugged Vacuum or Pressure Line	X	X	X		X	X
Low Voltage	X		X		X	X
Leaky Relief Valve	X		X			